\\Msfs\data\D\F\Frontier Burgers @ Petro 120928\FRONTIER PETRO CENTER\Construction Dwgs Petro Center 073014\A2.1 Rm Fin Sched.dwg
Monday October 13, 2014, 10:03am
XREF: NEW TBLK 30x42 [\\Msfs\d\DATA\D\F\Frontier Burgers @ Petro 120928\FRONTIER PETRO CENTER\Construction Dwgs Petro Center 073014\NEW TBLK 30x42.dwg]

FINISH MATERIALS

EXTERIOR FINISH MATERIALS:

CP-1 CEMENT PLASTER: 3/4" 3 STEP EXTERIOR PLASTER
FINISH: SAND FLOAT
COLOR: LA HABRA X-55 FRENCH VANILLA

SV-1 STONE VENEER: SISTERDALE LIMESTONE (ALTERNATE NO 1 STONE VENEER)
COLOR: CREAM, WHITE & RUST MIX
PATTERN: UNCOURSED ROUGHLY SQUARE
GROUT COLOR: 1/2" TO MATCH STONE COLOR.

EP-1 EXTERIOR PAINT: SHERWIN-WILLIAMS EPOXY SEMI-GLOSS
COLOR: SW-7007 EXTRA WHITE

EP-2 EXTERIOR PAINT: SHERWIN-WILLIAMS GLOSS
COLOR: SW-6871 POSITIVE RED

EP-3 EXTERIOR PAINT: SHERWIN-WILLIAMS SEMI-GLOSS
COLOR: CUSTOM TO MATCH CEMENT PLASTER CP-1
PRIMER: SW-BLOCK FILLER @ CMU BLOCK (DUMPSTERS)

MR-1 METAL ROOFING: BERRIDGE (ALTERNATE NO 2 MODIFIED BITUMEN ROOF)
PROFILE: "M" PANEL NO. 24 MSG
COLOR: SW-6871 POSITIVE RED

INTERIOR FINISH MATERIALS:

FLOOR:
SC-1 SEALED CONCRETE

FT-1 PORCELAIN TILE: 8"x8" (ALTERNATE NO 3 QUARRY TILE IN KITCHEN)
COLOR:
GROUT:

FT-2 PORCELAIN TILE: 12"x12"
COLOR:
GROUT:

FT-3 PORCELAIN TILE: 18"x18" PERIMETER BORDER
COLOR:
GROUT:

FT-4 PORCELAIN TILE: 18"x18" LAID DIAGONALLY
COLOR:
GROUT:

BASE:
B-1 PORCELAIN TILE COVED BASE: 4"x6"
COLOR:
GROUT:

B-2 QUARRY TILE COVED BASE: 6"x8"
COLOR:
GROUT:

B-3 TOPSET BASE: 5/8"x 6" PARKLAND PLASTICS
COLOR: DURA-BASE BLACK
GROUT:

WAINSCOT:
WS-1 WAINSCOT: LP O/ 1/4" PLYWOOD BACKING
LAMINATED PLASTIC:
COLOR:

WALL:
GB-1 GYPSUM WALL BOARD: 5/8" MOISTURE RESISTANT
TYPE 'X' GYPSUM BOARD, NO TEXTURE (U.N.O.).

GB-2 GYPSUM WALL BOARD: 5/8" TYPE 'X' GYPSUM BOARD,
NO TEXTURE. (U.N.O.)

CBB-1 CEMENT BACKER BOARD: 5/8" CEMENTIOUS BACKER BD.
TAPE AND FLOAT FOR WATERPROOFING. (U.N.O.)

FRP-1 FIBERGLASS REINFORCED PLASTIC: MARLITE 48X108
COLOR: P-100FR WHITE, PEBBLE TEXTURE
TRIM: TO MATCH FRP COLOR.

WT-1 WALL TILE: 8"x 8" PORCELAIN
COLOR:
GROUT:

VWC-1 VINYL WALL COVERING: SELECTED BY OWNER
COLOR:
GROUT:

CEILING MATERIAL:
AC-1 2' X 4' SUSPENDED PLASTIC FACED ACOUSTIC LAY-IN:
COLOR:
TEE GRID:

AC-2 2' X 4' SUSPENDED ACOUSTIC LAY-IN:
COLOR:
TEE GRID:

GB-3 5/8" GYPSUM BOARD:
TAPE AND FLOAT

PAINT:
(2 FINISH COATS O/ OIL BASED PRIMER)
P-1 PAINT:
COLOR:
FINISH:

LAMINATED PLASTIC:
LP-1 LAMINATED PLASTIC:
COLOR:

SOLID SURFACE MATERIAL:
CM-1 SOLID SURFACE MATERIAL:
COLOR:

STAINLESS STEEL:
SS-1 STAINLESS STEEL

ROOM FINISH SCHEDULE

NO.	DESCRIPTION	FLOOR: 1 SEALED CONCRETE AT OUTSIDE LANDING	FLOOR: 2 FT-1 PORCELAIN TILE (8x8) SEE ALT. 3	FLOOR: 3 FT-2 PORCELAIN TILE (12x12)	FLOOR: 4 FT-3 PORCELAIN TILE (18x18)	FLOOR: 5 FT-4 PORCELAIN TILE (18x18/DIAG.)	BASE: 6 B-1 PORCELAIN TILE (4X6)	BASE: 7 B-2 QUARRY TILE (6X8)	BASE: 8 B-3 TOPSET BASE (5/8X6)	WAINSCOT: 9 WS-1 1/4" PLYWOOD / LAM. PLASTIC	WAINSCOT: 10 P-1 PAINTED CHAIR RAIL	WALLS MATERIALS: 11 GB-1 5/8" MR GYP. WALLBOARD	WALLS MATERIALS: 12 GB-2 TYPE "X" GYP. WALLBOARD	WALLS MATERIALS: 13 CBB-1 1/2" CEMENT. BACKER BOARD	WALLS FINISH: 14 FRP-1 FIBERGLASS REINF. PLASTIC	WALLS FINISH: 15 WT-1 WALL TILE (8X8)	WALLS FINISH: 16 VWC-1 VINYL WALL COVERING	WALLS FINISH: 17 P-1 PAINT	WALLS FINISH: 18 LP-1 LAMINATED PLASTIC	WALLS FINISH: 19 CM-1 SOLID SURFACE MATERIAL	WALLS FINISH: 20 SS-1 STAINLESS STEEL	CEILING MATERIALS: 21 AC-1 24x48 PLAS. FACED LAY-IN	CEILING MATERIALS: 22 AC-2 24X48 ACOUSTICAL TILE	CEILING MATERIALS: 23 GB-3 5/8" GYP. WALLBOARD	CEILING FINISH: 24 P-1 PAINT	CEILING HEIGHT: 25 8'-0"	CEILING HEIGHT: 26 8'-6"	CEILING HEIGHT: 27 9'-0"	CEILING HEIGHT: 28 9'-6"	CEILING HEIGHT: 28 10'-0"	REMARKS
100	ENTRANCE	1*			4				8	9	10		12				16	17					22							29	1* ENTRY DOOR
101	WAITING AREA					5	6*		8				12					17	18*				22							29	6* AT SERVICE COUNTER/ 18* LAMINATED BOOTH BACK PANEL
102	DINING ROOM	1*			4	5			8	9	10		12			15*	16	17	18*				22				26*			29	1* ENTRY DOOR/ 15* & 26* CONDIMENTS/ 18* LAMIN. BOOTH BACK PANEL
103	SERVICE AREA	1*		3			6					11	12			15*	16	17	18*				22						28		1* EXPEDITE DOOR/ 15* BACK WALL/18* SERVICE COUNTER
104	VESTIBULE			3			6			9	10		12				16	17					22			25					
105	MEN'S			3			6					11				15		17	18*	19*				23	24	25					18* LAVATORY APRON & KNEESPACE PANELS/ 19* LAVATORY TOP & SPLASH
106	WOMEN'S			3			6					11				15		17	18*	19*				23	24	25					18* LAVATORY APRON & KNEESPACE PANELS/ 19* LAVATORY TOP & SPLASH
107	OFFICE		2					7				11		13	14			17				21						27			
108	CLOSET		2					7				11		13	14			17				21						27			
109	KITCHEN AREA		2					7				11		13	14			17			20*	21						27			20* BACK WALL AT VENT HOODS AND SHELF AT PONY WALL (SEE ALT. NO 3)
110	PRODUCT PICK UP	1*	2					7				11		13	14			17				21						27			1* SERVICE DOOR
111	PAY WINDOW		2					7				11		13	14			17				21						27			
112	38' W.I. COOLER BOX		2					7																							* WALLS & CEILING ARE SET BY MANUFACTURER OF WALK-IN
113	0' W.I. FREEZER BOX		2					7																							* WALLS & CEILING ARE SET BY MANUFACTURER OF WALK-IN
114	STORAGE		2					7				11		13	14			17				21						27			
115	PREP AREA		2					7				11		13	14			17				21						27			
116	STORAGE		2					7				11		13	14			17				21						27			
117	SPRINKLER ROOM	1*	NONE					NONE				11		13				17						23	24	25					
118	WATER HEATER	1*	NONE					NONE				11		13				17						23	24	25					
119	WATER SOFTENER	1*	NONE					NONE				11		13				17						23	24	25					
	OUTSIDE CANOPY STRUCTURES																														* ALL CANOPY STRUCTURES ARE STUCCO SOFFIT W/ FURRING CHANNELS

ALUMINUM STOREFRONT AND WINDOW TYPES

NOTE:
SEE SHEET A6.0 FOR DOOR & WDW DETAILS

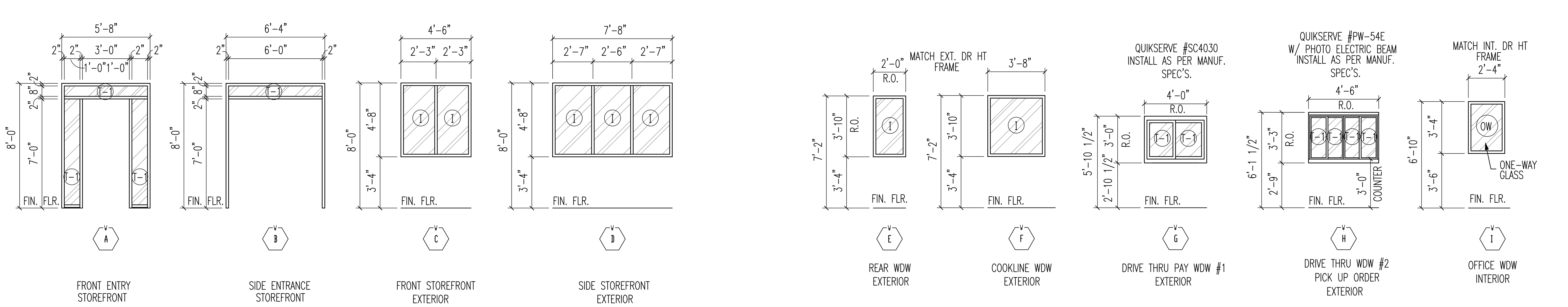

DOOR SCHEDULE

DOOR MARK	OPENING SIZE WIDTH	OPENING SIZE HEIGHT	TYPE	THICKNESS	CONSTRUCTION	FACING AND FINISH	GLASS	FRAME	HARDWARE	REMARKS
1	3'-0"	7'-0"	A	–	AL		T-1	SF/A		①②
2	3'-0" PR	7'-0"	B	–	AL		T-1	SF/B		①②
3	2'-0"	6'-8"	C	1 3/4"	HM	MP	T-1	4		STAINLESS STEEL DOOR FRAME, ①②
4	3'-8"	7'-0"	D	1 3/4"	HM	MP		5		①②③④⑤ AIR CURTAIN DOOR
4S	3'-0"	7'-0"	K	1 3/4"	HM	MP		3		SPRINKLER ROOM
5	3'-0"	6'-8"	F	1 3/4"	SC	LP		2		④
6	3'-0"	6'-8"	F	1 3/4"	SC	LP		2		④
7	3'-0"	5'-0"	H	1 3/4"	SC	LP		2		
8	3'-0"	5'-0"	H	1 3/4"	SC	LP		2		
9	2'-0"	5'-0"	I	1 3/4"	SC	LP		1		
10	3'-0"	6'-8"	G	1 3/4"	SC	LP	T-2	6		STAINLESS STEEL DOOR FRAME, ④⑥
11	2'-0"	6'-8"	E	1 3/4"	SC	LP		1		
12	3'-0"	6'-8"	F	1 3/4"	SC	LP		2		④
13	3'-2 1/2"	6'-7 1/2"	J	–	–	AL		–		WALK-IN FREEZER
14	3'-2 1/2"	6'-7 1/2"	J	–	–	AL		–		WALK-IN COOLER
15	3'-0"	7'-0"	L	1 3/4"	HM	MP		7		TWO PANEL LOUVERED
16	3'-0"	7'-0"	K	1 3/4"	HM	MP		7		

REMARKS:
① SIGN ABOVE DOOR TO STATE "THIS DOOR TO REMAIN OPEN DURING BUSINESS HOURS"; PAINTED IN 1" LETTERS ON DOOR FRAME.
② KEYED LOCK AND SEPARATE DEADBOLT PER LOCAL SECURITY REGULATIONS.
③ PEEP HOLE
④ KICK PLATES (SEE DOOR ELEVATION)
⑤ PANIC DEVICE
⑥ 14 GA. STAINLESS STEEL FRAME TO BE FURNISHED BY KIT. SUPPLIER IN STALLED BY GENERAL CONTRACTOR.

DOOR SCHEDULE KEYED NOTES:

1. Door Construction:
   - SC = Solid Core
   - HM = Hollow Metal
   - AL = Aluminum & Glass
2. Facing and Finish:
   - AL = Aluminum
   - LP = Laminated Plastic, Textured
   - MP = Metal, Painted
3. Glass:
   - T-1 = 1/4" Tempered (Gray)
   - T-2 = 1/4" Tempered (Clear)
   - T-3 = 1/2" Tempered (Gray)
   - I = 1" Insulated (1/4" Gray / 1/4" Tempered)
   - OW = One Way
   - CL = Clear Lexan
   - SF = Store Front
4. Refer to Specs for Hardware Schedule.

NOTE:
SEE SHEET A6.0 FOR DOOR & WDW DETAILS

DOOR TYPES

NOTE:
SEE SHEET A6.0 FOR DOOR & WDW DETAILS

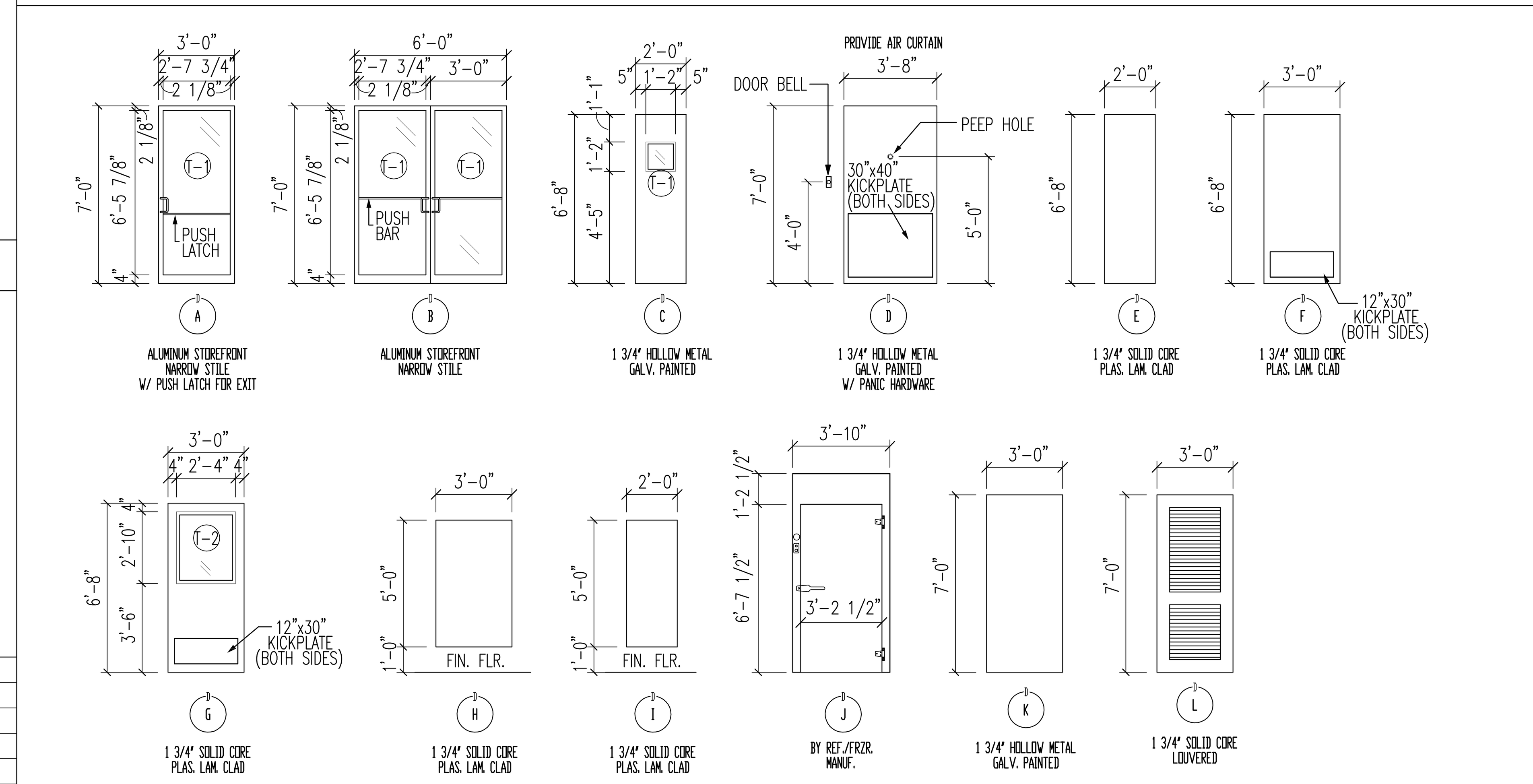

DOOR FRAME TYPES

NOTE:
SEE SHEET A6.0 FOR DOOR & WDW DETAILS

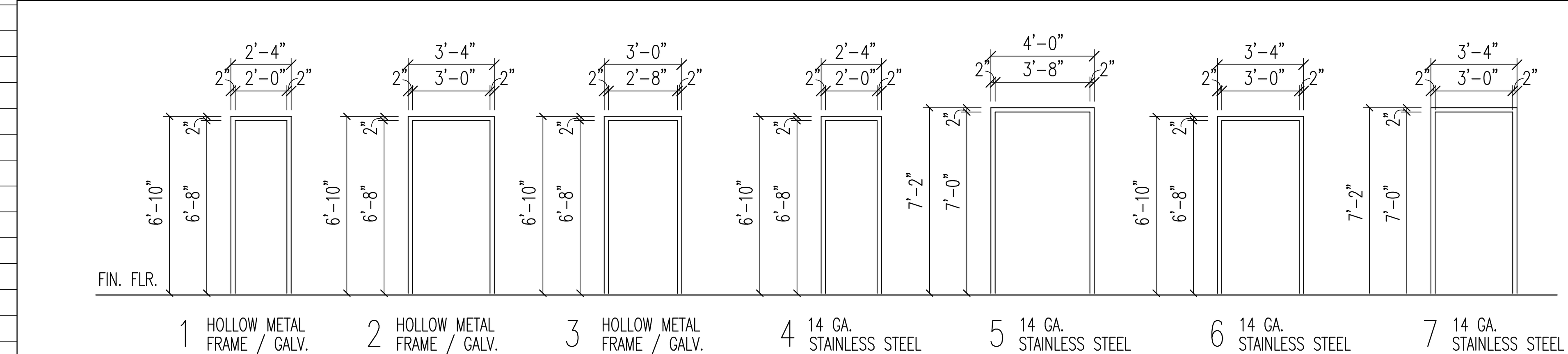

MORGAN SPEAR ASSOCIATES, INC.
ARCHITECTS PLANNERS
225 S. CARANCAHUA STREET
CORPUS CHRISTI, TEXAS 78401
(361) 883-5588 PHONE (361) 883-9204 FAX

REGISTERED ARCHITECT MORGAN SPEAR 2694 STATE OF TEXAS
EXP. DATE: FEB.26/2015 SEP.22/2014

COPYRIGHT 2014
MORGAN SPEAR ASSOCIATES, INC.
ANY REPRODUCTION, POSSESSION, OR USE OF THESE PLANS OR ANY PART THEREOF WITHOUT THE WRITTEN PERMISSION OF MORGAN SPEAR ASSOCIATES, INC. OF CORPUS CHRISTI, TEXAS IS PROHIBITED AND WILL BE PROSECUTED TO THE FULL EXTENT OF THE LAW.

JIM'S FRONTIER BURGER

PETRO CENTER/CROWNHILL @ I.H. 410
SAN ANTONIO, TEXAS 78209

ARCHITECT'S PROJECT NUMBER 120928

DATE: 09/22/14

SCALE 1/4" = 1'-0"

REVISIONS

SHEET TITLE
ROOM FINISH SCHEDULE AND DOOR & WDW TYPES

SHEET NUMBER
A2.1

SHEET __ OF __