COLUMN SCHEDULE

MARK	SECTION	BASE PLATE W x D x t	BASE PLATE ANCHORS	COLUMN TO BASE PLATE WELD SIZE	NOTES
C1	TS 4"x4"x1/4"	10"x10"x3/4"	(4) 3/4"ø x 8"HCA	5/16" fillet	
C2					
C3					

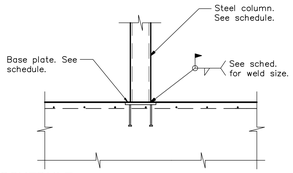

1 COLUMN BASE & SCHEDULE

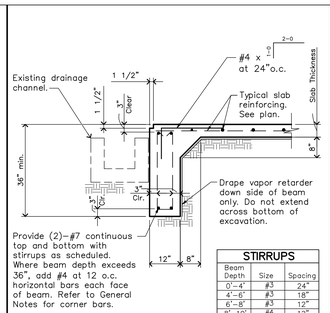

STIRRUPS		
Beam Depth	Size	Spacing
0'-4"	#3	24"
4'-6"	#3	18"
6'-8"	#3	12"
8'-10"	#4	12"

2 EXTERIOR GRADE BEAM

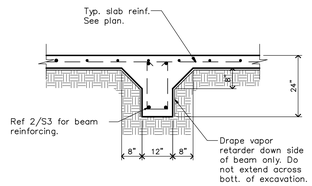

3 INTERIOR GRADE BEAM

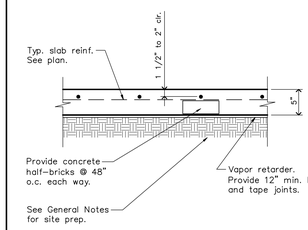

4 SLAB REINFORCING SUPPORT DETAIL

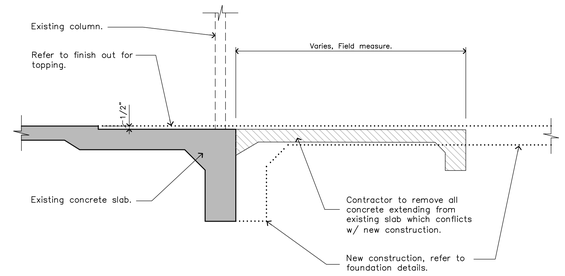

5 GRADE BEAM @ EXISTING BUILDG.

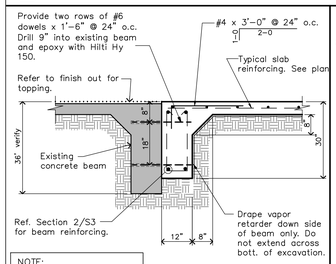

NOTE:
Do not undermine existing grade beam. If bottom of existing beam is exposed, notify Engineer.

6 GRADE BEAM ALONG EXISTING

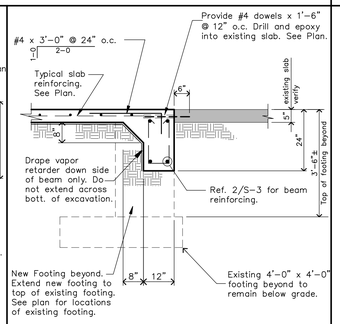

7 FOUNDATION @ WALKWAY SLAB

BEAM SIZE	BEAM WEB PLATE t	# of Bolts	Fillet Weld
W8	1/4"	2	3/16
W10	1/4"	3	1/4
W12	1/4"	3	1/4
W14	1/4"	4	1/4
W16	5/16"	4	1/4
W18	3/8"	5	5/16
W21	7/16"	6	5/16
W24	1/2"	7	5/16

BOLT SIZES: (A325)
ROOF LEVEL: 3/4"ø
FLOOR LEVEL: 1"ø

Shop weld web plates to beam flanges & web.

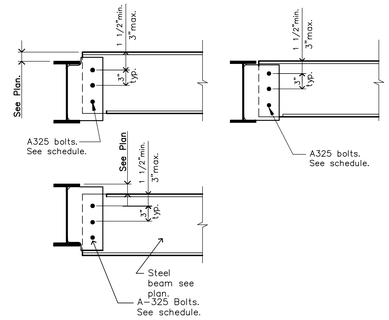

8 BEAM to BEAM CONNECTION

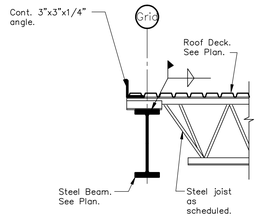

9 ROOF DECK CLOSURE DETAIL
(Perpendicular to Joist)

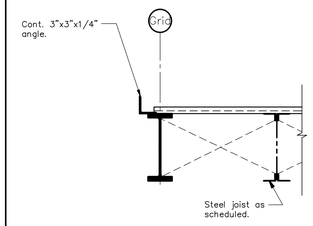

10 ROOF CLOSURE DETAIL
(Parallel to Joist)

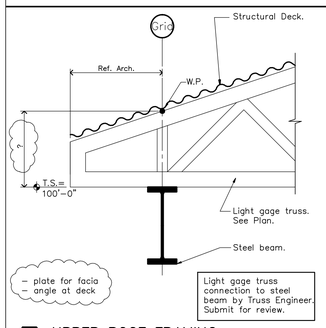

11 UPPER ROOF FRAMING

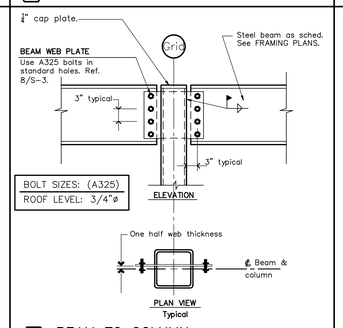

BOLT SIZES: (A325)
ROOF LEVEL: 3/4"ø

12 BEAM TO COLUMN

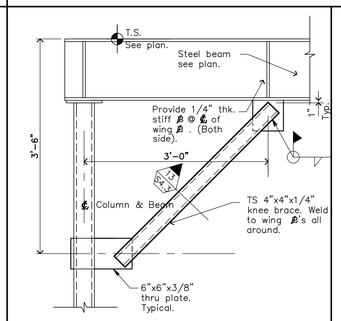

13 KNEE-BRACE DETAIL
NOTE: Locate knee braces where indicated on plan by "KB".

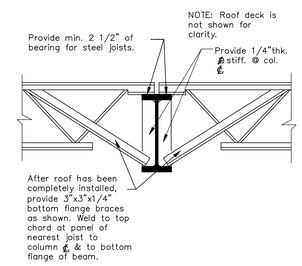

14 JOIST TO BEAM CONNECTION

PRICING SET

Mdn ARCHITECTS
9639 McCullough Ave.
San Antonio, Texas 78216
Tel. 210.340.2400
Fax. 210.340.2449
www.mdnarchitects.com

revisions:

INTERIM REVIEW ONLY
DOCUMENT INCOMPLETE: NOT INTENDED FOR PERMIT, BIDDING OR CONSTRUCTION.

DAVID R. WONDER, P.E.
TEXAS REG. NO. 60670
DATE: 08-17-10

PERSYN ENGINEERING
4734 College Park
San Antonio, Texas • 78249-4008
Phone: (210) 680-4126 • Fax: (210) 680-8717
Texas Firm Registration #F-188

BROADWAY SQUARE SHOPPING CENTER - REMODEL

BROADWAY @ LOOP 410
SAN ANTONIO, TX

COPYRIGHT © 2010 MDN ARCHITECTS, INC.

THIS DRAWING IS PROVIDED AS AN INSTRUMENT OF SERVICE BY MDN ARCHITECTS, INC. (THE "ARCHITECT") AND IS INTENDED FOR USE ONLY IN THE CONSTRUCTION OF THE PROJECT IDENTIFIED ON THIS DRAWING. THE DRAWING MUST BE RETURNED TO THE ARCHITECT UPON REQUEST AND SHALL BE RETURNED TO THE ARCHITECT UPON COMPLETION OF THE CONSTRUCTION WORK ON SUCH PROJECT. PURSUANT TO THE ARCHITECT'S CONTRACT WITH THE OWNER, THIS DRAWING, ALL DRAWINGS, SPECIFICATIONS, AND DESIGNS, INCLUDING WITHOUT LIMITATION THE OVERALL FORM, SELECTION, ARRANGEMENT AND CONTENT OF THE DESIGN ELEMENTS APPEARING HEREIN, PROVIDED BY THE ARCHITECT CONSTITUTE THE COPYRIGHT PROTECTED WORK AND CONFIDENTIAL INFORMATION OF THE ARCHITECT. ANY REPRODUCTION, DISTRIBUTION, USE OR DISCLOSURE OF THIS DRAWING OR ANY PART THEREOF WITHOUT PRIOR WRITTEN CONSENT OF THE ARCHITECT IS STRICTLY PROHIBITED.

project #:
date:
rev. by checked by date
drawn by:
drawing title:
drawning number:

S-3